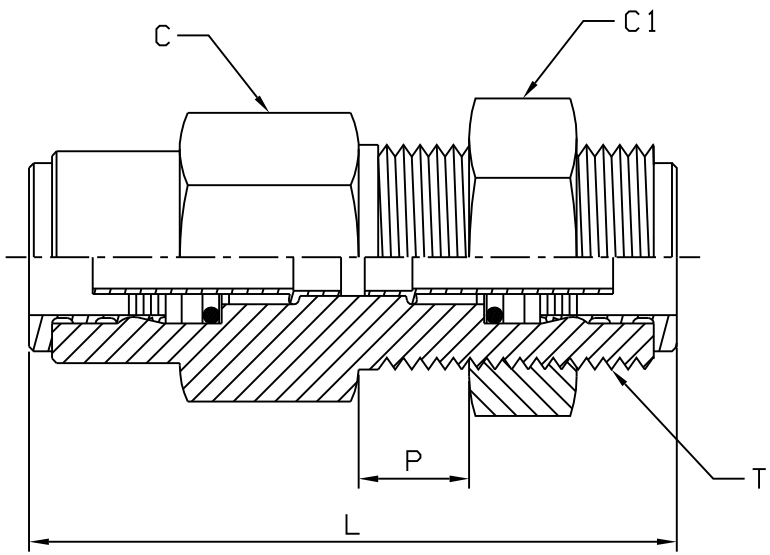

TUBE O.D.	THREAD T	HEX C	HEX C1	L	MAX P
1/4	9/16-24	5/8	11/16	1.62	0.47

W

"This drawing contains proprietary and confidential information of Midland Metal Mfg., Co. and shall not be reproduced, copied, loaned, or submitted to outside parties for examination without our consent"

NO.	PCA	Date	Revision
4			
3			
2			
1			A

TOLERANCES ARE:
DECIMALS.
.X:± 0.03
.XX:± 0.01
.XXX:± 0.005
ANGLES:± 1°
FRACTIONS ± 1/8

Date:	11/13/03	UNIT:	INCH
Drawn:	Rita Sue	Scale:	2=1
Checked:		PROJECT	
Approved:			

MIDLAND METAL MFG. CO.
KANSAS CITY,MO

Material:	CA360 BRASS
Part Title:	QUICK CONNECT BULKHEAD UNION
PART NO.	820400
DWG. NO.	